This article was downloaded by:
On: *25 January 2011*
Access details: *Access Details: Free Access*
Publisher *Taylor & Francis*
Informa Ltd Registered in England and Wales Registered Number: 1072954 Registered office: Mortimer House, 37-41 Mortimer Street, London W1T 3JH, UK

Separation Science and Technology
Publication details, including instructions for authors and subscription information:
http://www.informaworld.com/smpp/title~content=t713708471

Development of a Spiral-Type Flowing Liquid Membrane Module with High Stability and Its Application to the Recovery of Chromium and Zinc

Masaaki Teramoto[a]; Nobuyuki Tohno[a]; Noriaki Ohnishi[a]; Hideto Matsuyama[a]
[a] DEPARTMENT OF INDUSTRIAL CHEMISTRY, KYOTO INSTITUTE OF TECHNOLOGY MATSUGASAKI, SAKYO-KU, KYOTO, JAPAN

To cite this Article Teramoto, Masaaki , Tohno, Nobuyuki , Ohnishi, Noriaki and Matsuyama, Hideto(1989) 'Development of a Spiral-Type Flowing Liquid Membrane Module with High Stability and Its Application to the Recovery of Chromium and Zinc', Separation Science and Technology, 24: 12, 981 — 999
To link to this Article: DOI: 10.1080/01496398908049884
URL: http://dx.doi.org/10.1080/01496398908049884

PLEASE SCROLL DOWN FOR ARTICLE

Full terms and conditions of use: http://www.informaworld.com/terms-and-conditions-of-access.pdf

This article may be used for research, teaching and private study purposes. Any substantial or systematic reproduction, re-distribution, re-selling, loan or sub-licensing, systematic supply or distribution in any form to anyone is expressly forbidden.

The publisher does not give any warranty express or implied or make any representation that the contents will be complete or accurate or up to date. The accuracy of any instructions, formulae and drug doses should be independently verified with primary sources. The publisher shall not be liable for any loss, actions, claims, proceedings, demand or costs or damages whatsoever or howsoever caused arising directly or indirectly in connection with or arising out of the use of this material.

SEPARATION SCIENCE AND TECHNOLOGY, 24(12 & 13), pp. 981-999, 1989

Development of a Spiral-Type Flowing Liquid Membrane Module with High Stability and Its Application to the Recovery of Chromium and Zinc

MASAAKI TERAMOTO,* NOBUYUKI TOHNO, NORIAKI OHNISHI, and HIDETO MATSUYAMA

DEPARTMENT OF INDUSTRIAL CHEMISTRY
KYOTO INSTITUTE OF TECHNOLOGY
MATSUGASAKI, SAKYO-KU, KYOTO 606, JAPAN

Downloaded At: 12:54 25 January 2011

Abstract

A new type of liquid membrane named a "flowing liquid membrane" is proposed. In this type of liquid membrane, a liquid membrane solution containing a carrier flows in thin channels between two hydrophobic microporous membranes which separate the membrane solution from a feed and a strip solution, and forms a stable liquid membrane. The flowing liquid membrane was made into a spiral-type module, and experiments on the separation and enrichment of Cr(VI) in aqueous solutions were performed with the flowing membrane module using tri-*n*-octylamine as the carrier. It was found that this type of module has high stability as well as high performance, and Cr(VI) was successfully removed and concentrated from its dilute solutions. The result on the recovery of zinc using di(2-ethylhexyl)phosphoric acid as the carrier is also presented.

INTRODUCTION

Supported liquid membranes have been attracting attention as a potential method for the separation of various solutes such as metal ions, acids, bases, and organic compounds (*1*). A supported liquid membrane

*To whom correspondence should be addressed.

Copyright © 1989 by Marcel Dekker, Inc.

is usually formulated by incorporating a membrane solution containing a carrier in the micropores of a porous membrane. In order to use this type of membrane for practical purposes, there are several problems to be solved. The most serious problem is the instability caused primarily by the dissolution of the liquid membrane solution, which is held in the micropores of support membranes by the capillary force, in aqueous feed and strip solutions (*2*).

In order to prevent the degradation of supported liquid membranes, it was found to be very effective to supply the membrane solution continuously to support membranes, and from this point of view, several methods have been proposed. Teramoto and Tanimoto (*3*) proposed a method in which a membrane solution is added to the strip solution to keep the support membrane in contact with the membrane solution. Danesi et al. (*4*) proposed a special type of hollow fiber module equipped with a reservior containing an organic membrane solution in the upper part of the module. In this module the membrane solution is transported from the reservior to the hollow fibers by the capillary force. They showed this type of module was stable for more than about 40 days. However, when the solubility of the membrane solution is relatively high, there may be a case where the rate of the transport of the membrane solution is not fast enough for the micropores to be refilled with the organic membrane solution.

In the present paper a new type of stable liquid membrane called a "flowing liquid membrane" is proposed in which the organic membrane solution flows in a thin channel between two hydrophobic microporous membranes separating the liquid membrane phase from an aqueous feed solution and a strip solution.

The earliest study on this type of membrane was reported by Igawa et al. (*5*). They produced a small flat-type flowing liquid membrane cell using Visking dialysis membranes to separate two aqueous phases from an organic membrane phase, and they performed experiments on the transport of alkali metal ions using dibenzo-18-crown-6 as the carrier dissolved in 1,1,2,2-tetrachloroethane. They reported that the permeation flux was enhanced by increasing the flow rate of the membrane solution. However, they did not discuss the stability of the membrane. Since the support they used was hydrophilic and was wetted by both the aqueous and organic solutions, its ability to separate the aqueous phases from the organic phase does not seem to be better than that of a hydrophobic membrane which was wetted only by the organic solution. Furthermore, when the distribution ratio of a permeant species is high, the contribution of the mass transfer resistance through the support membrane which is wetted by the aqueous solution becomes large, and this leads to low

Downloaded At: 12:54 25 January 2011

permeation flux. Therefore, use of hydrophobic membranes whose pores are filled with the organic membrane solution seems to be favorable for obtaining high stability and permeability, and even if the organic membrane solution in the micropores of the support membrane dissolves in the aqueous feed and strip solutions, the pores are rapidly refilled with the organic solution. Therefore, it is expected that a flowing liquid membrane will be very stable compared to conventional supported liquid membranes, and this has been demonstrated by Teramoto et al. in experiments on gas separation, i.e., the separation of ethylene from ethane (*6*), and also in the separation of organic components such as the separation of benzene from cyclohexane (*7*).

On the other hand, Teramoto et al. (*8*) reported that a spiral-type supported liquid membrane module is very effective for the recovery and enrichment of solutes. In the present work the flowing liquid membrane was made into a spiral-type module. By using this module, experiments on the separation and concentration of Cr(VI) (carrier: tri-*n*-octylamine) and the recovery of zinc (carrier: di(2-ethylhexyl)phosphoric acid) were performed to examine the stability and permeability.

Downloaded At: 12:54 25 January 2011

EXPERIMENTAL

(1) Spiral-Type Flowing Liquid Membrane Module

A schematic diagram of the spiral-type flowing liquid membrane module is shown in Fig. 1. The microporous membranes used were Fluoropore FP-010 polytetrafluoroethylene films (length: 2 m, width: 17.4 cm, thickness: 60 μm, porosity: 67%, average pore diameter: 0.1 μm) which were kindly supplied by Sumitomo Electric Industries Ltd.. The microporous membranes and mesh spacers (Dainippon Plastics Co., KDJ-6, thickness: 0.8 mm, opening: 87%) were spirally wound around acrylic resin pipes through which the feed solution, the strip solution, and the organic membrane solution were supplied to the module, and the outer surface and the top and bottom ends of the module were sealed with an adhesive. The diameter and height of the module were 12 and 19 cm, respectively. The feed and strip solutions and the organic membrane solution were withdrawn through outlet pipes inserted in the outermost channels. The flow sheet of the experimental apparatus is shown in Fig. 2. The module was operated in a once-through mode for the feed solution, and in a recycling mode for the strip and the membrane solution. The flow rate of the strip solution was adjusted to be

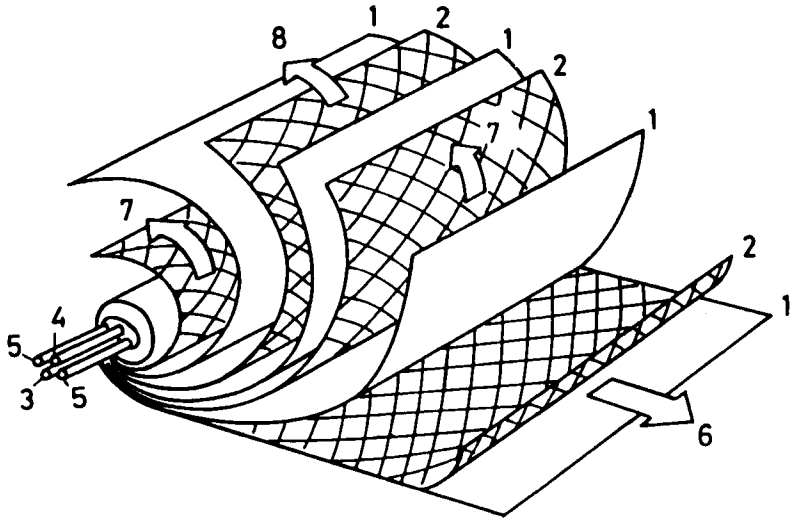

(a)

FIG. 1. Spiral-type flowing liquid membrane module. (a) Schematic diagram: (1) Microporous hydrophobic membrane (support), (2) mesh spacer, (3) inlet pipe of feed solution, (4) inlet pipe of strip solution, (5) inlet tube of organic membrane solution, (6) feed solution, (7) organic membrane solution, (8) strip solution. (b) Cross-sectional view:

channel of feed solution

channel of strip solution

channel of organic membrane solution

H: microporous polytetrafluoroethylene membrane (Fluoroopre, FP-010), F_i: inlet pipe of fees solution, F_o: outlet pipe of feed solution, S_i: inlet pipe of strip solution, S_o: outlet pipe of strip solution, M_i: inlet pipe of organic membrane solution, M_o: outlet pipe of organic membrane solution. A mesh spacer is inserted in each channel.

approximately the same as that of the feed solution. In order to constrain the organic membrane solution between the two hydrophobic membranes, the pressure in the channels of both aqueous solutions was held at a little higher level than that in the channels of the organic membrane solution by the use of level controllers. Chromium and zinc were determined with an atomic absorption spectrophotometer. The temperature was 298 K.

Downloaded At: 12:54 25 January 2011

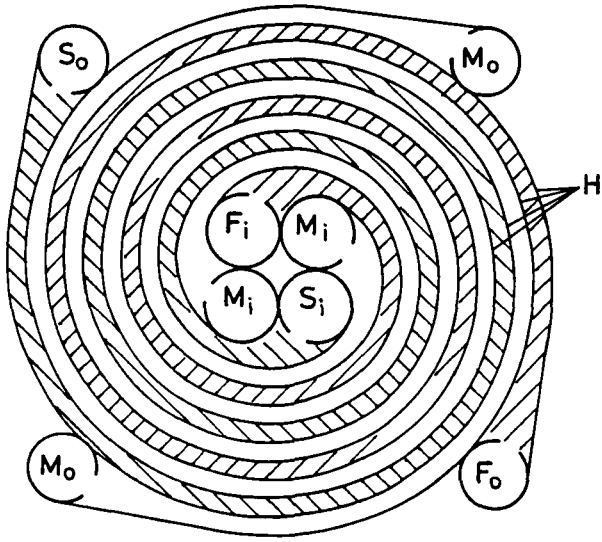

(b)

Downloaded At: 12:54 25 January 2011

(2) Permeation Cell with Flat Supported Liquid Membrane

In order to select a liquid membrane system suitable for the separation of Cr(VI), a series of preliminary experiments was performed with a permeation cell with a conventional flat supported liquid membrane which was the same as that used in the previous paper (*9*). The volumes of the feed and the strip solutions were 250 and 45 cm^3, respectively, and the membrane area was 20 cm^2. Each of the feed and strip solutions was stirred by a magnetic stirring at 290 rpm. In most experiments a Duragard 2502 membrane, supplied by Polyplastics Co., Japan, was used as the microporous membrane. This membrane was produced by sticking two sheets of Duragard 2500 membrane made of polypropylene (thickness: 25 μm, porosity: 0.47, pore size: 0.04 × 0.4 μm) together.

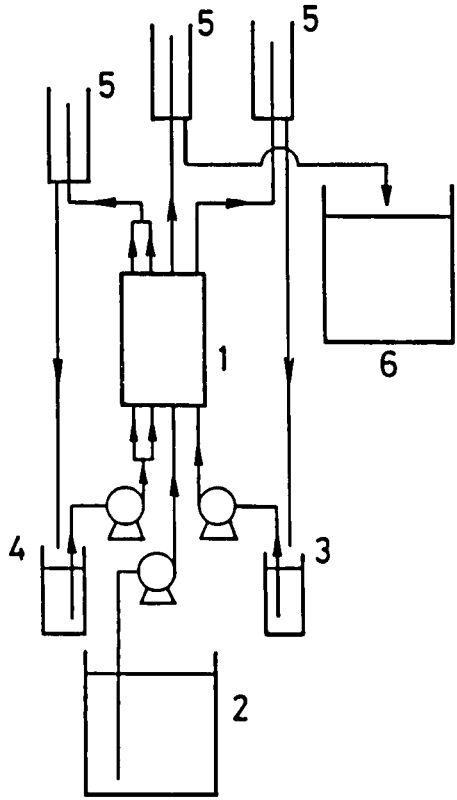

FIG. 2. Schematic diagram of experimental apparatus. (1) Spiral-type flowing liquid membrane module, (2) reservior of feed solution, (3) reservior of strip solution, (4) reservior of membrane solution, (5) level controller, (6) reservior of raffinate.

Downloaded At: 12:54 25 January 2011

(3) Materials

The combination of carriers, organic solvents, and feed and strip solutions used in experiments with the permeation cell is summarized in Table 1. Tri-*n*-octylamine (TOA) or trioctylmethylammonium chloride (TOMAC) was used as the carrier of Cr(VI). Shellsol AB, supplied from Shell Chemical Co., Japan, is a solvent consisting of aromatic components (>99.5%). 2-Ethylhexyl alcohol was used as the modifier. Aqueous Cr(VI) solutions were prepared by dissolving $K_2Cr_2O_7$ in deionized water, and the pH was adjusted with sulfuric acid.

RESULTS AND DISCUSSION

(1) Selection of Carrier and Experimental Conditions

Prior to experiments with the module, a series of preliminary experiments was carried out using the permeation cell in order to select a liquid membrane system suitable for the transport of Cr(VI). Tri-*n*-octylamine or trioctylmethylammonium chloride was used as the carrier. Typical experimental results are summarized in Table 1.

The transport mechanism of Cr(VI) through a TOA membrane when sodium hydroxide solution is used as a strip solution is shown in Fig. 3. In the range of pH employed, Cr(VI) ion exists mainly in the form of $HCrO_4^-$ (*10*). The extraction and stripping reactions are considered to be expressed as follows:

$$HCrO_4^- + H^+ + n\overline{R_3N} \rightleftharpoons \overline{complex} \quad (1)$$

$$\overline{complex} + 2OH^- \rightleftharpoons n\overline{R_3N} + CrO_4^{2-} + 2H_2O \quad (2)$$

The overall reaction is expressed by

$$HCrO_4^- + H^+ + 2OH^- \rightleftharpoons CrO_4^{2-} + 2H_2O \quad (3)$$

According to this mechanism, $HCrO_4^-$ and a proton are transported simultaneously from the feed to the strip solution (cotransport). Because sulfuric acid is extracted by tertiary amine (*11*), it is also transported across the liquid membrane. If the transport of sulfuric acid is neglected and only Cr(VI) is transported, the flux ratio J_H/J_{Cr} is 2 according to the above mechanism.

It is seen from a comparison of Runs 1 and 2 that the use of the aromatic solvent Shellsol AB gives a higher flux than that of a aliphatic solvent, i.e., *n*-dodecane. When 2-ethylhexyl alcohol was not added to the membrane solution as a modifier, aggregates of the Cr(VI)–TOA complex deposited on the membrane surface of the feed side, which seemed to decrease the chromium flux. Such a deposition could be avoided by adding 2-ethylhexyl alcohol to the membrane phase. In Runs 3 and 4, reducing agents, $FeSO_4$ and $NaHSO_3$, respectively, were added to the stripping side to reduce Cr(VI) to Cr(III) which cannot complex with TOA. However, the observed chromium fluxes were relatively low.

Downloaded At: 12:54 25 January 2011

Downloaded At: 12:54 25 January 2011

TABLE 1
Carriers, Organic Diluents, and Stripping Agents Used for Formulating Liquid Membranes for the Cr(VI) Permeation

Run[d]	Composition of liquid membrane[a]	pH of feed	Strip solution Cr(VI)	Flux[b]
1	TOA (65), *n*-dodecane (35)	1.6	0.5 mol/dm^3 NaOH	1.5×10^{-9}
2	TOA (30), 2-EHA[c] (5), Shellsol AB (65)	1.5	0.1 mol/dm^3 NaOH	1.8×10^{-9}
3	TOA (65), *n*-dodecane (35)	1.0	0.5 mol/dm^3 $FeSO_4$	1.0×10^{-9}
4	TOA (65), *n*-dodecane (35)	3.0	0.1 mol/dm^3 $NaHSO_3$	0.6×10^{-9}
5	TOMAC (25), 2-EHA (5), Shellso AB (70)	4.7	4 mol/dm^3 NaCl	1.3×10^{-9}
6	TOMAC (25), 2-EHA (5), Shellsol AB (70)	4.7	4 mol/dm^3 H_2SO_4	1.2×10^{-9}
7	TOMAC (25), 2-EHA (5), Shellsol aB (70)	4.7	4 mol/dm^3 NaOH	2.8×10^{-9}

[a]Numerical values in parentheses are volume percent.
[b]Unit is mol/cm^{2}s.
[c]2-Ethylhexyl alcohol.
[d]In Runs 1 and 3–7, Duragard 2502 membranes were used as the support, and in Run 2 a Fluoropore FP-010 membrane was used.

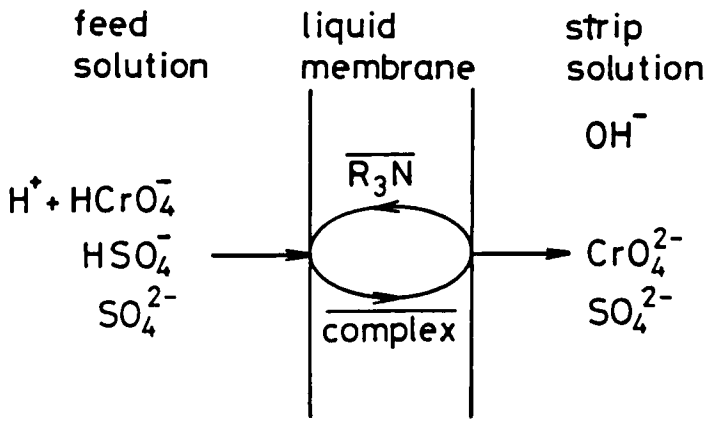

FIG. 3. Mechanism of chromium transport across liquid membrane containing tri-*n*-octylamine as a carrier.

Downloaded At: 12:54 25 January 2011

In the case of the TOMAC membrane, countertransport of Cr(VI) and anion X^{m-} occurs (*12*). In this membrane system, very high concentrations of stripping agents were necessary to obtain high chromium flux because the Cr(VI)-TOMAC complex is very stable. It was found in these experiments that water was strongly transported from the feed solution to the strip solution, suggesting that TOMAC can act as a carrier of water in the presence of the osmotic pressure difference caused by the large concentration difference of ions between two aqueous phases. It was concluded from these results that the liquid membrane consisting of 30 vol% TOA, 5 vol% 2-ethylhexyl alcohol, and 65 vol% Shellsol AB is suitable for the permeation of chromium, and this system was used in further experiments.

Figure 4 shows the effect of pH in the feed phase on the Cr(VI) flux and the flux ratio J_H/J_{Cr}. J_H was obtained from the time course of pH in the feed solution. In the range of pH studied, J_{Cr} slightly decreases with an increase in pH_F. At low pH_F, the flux ratio J_H/J_{Cr} is much higher than 2, suggesting that sulfuric acid is simultaneously transported by TOA, which leads to the useless consumption of NaOH in the strip solution. On the other hand, at high pH_F the transport of sulfuric acid is depressed and the flux ratio approaches 2. Therefore, the pH of the feed solution was usually adjusted to 2.5 in the experiment with the flowing liquid membrane module. The effect of chromium concentration $[Cr]_F$ is shown in Fig. 5. It can be seen that when $[Cr]_F$ is lower than about 500 ppm, J_{cr} is

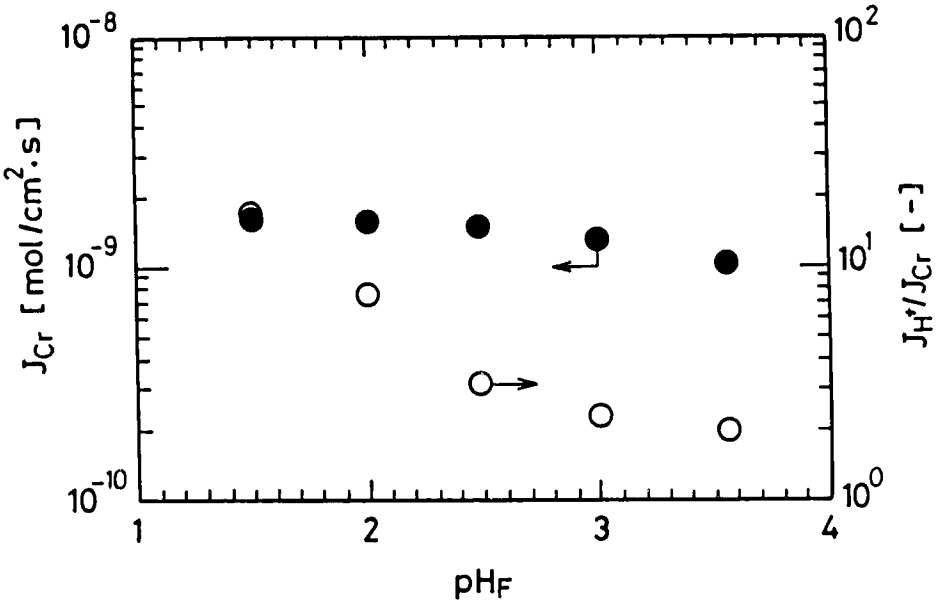

FIG. 4. Effect of pH in the feed solution. Permeation cell. $[Cr]_F$ = 100 ppm, $[NaOH]_S$ = 0.1 mol/dm^3, $[TOA]_M$ = 30 vol%, [2-ethylhexyl alcohol]$_M$ = 5 vol%, diluent: Shellsol AB, microporous membrane: Fluoropore FP-010.

Downloaded At: 12:54 25 January 2011

proportional to $[Cr]_F$. Intensification of stirring of the feed phase by using a 6-bladed turbine stirrer (diameter: 4 cm, stirring speed: 220 ppm) instead of a magnetic stirring bar results in increases of J_{Cr}. These results clearly indicate that chromium transport is limited mainly by the diffusion of $HCrO_4^-$ in the boundary layer of the feed phase. This is due to a high distribution ratio of Cr(VI). In this case the following equation holds approximately:

$$J_{Cr} = k_{FCr}[Cr]_F \tag{4}$$

where k_{FCr} is the mass transfer coefficient in the feed phase.

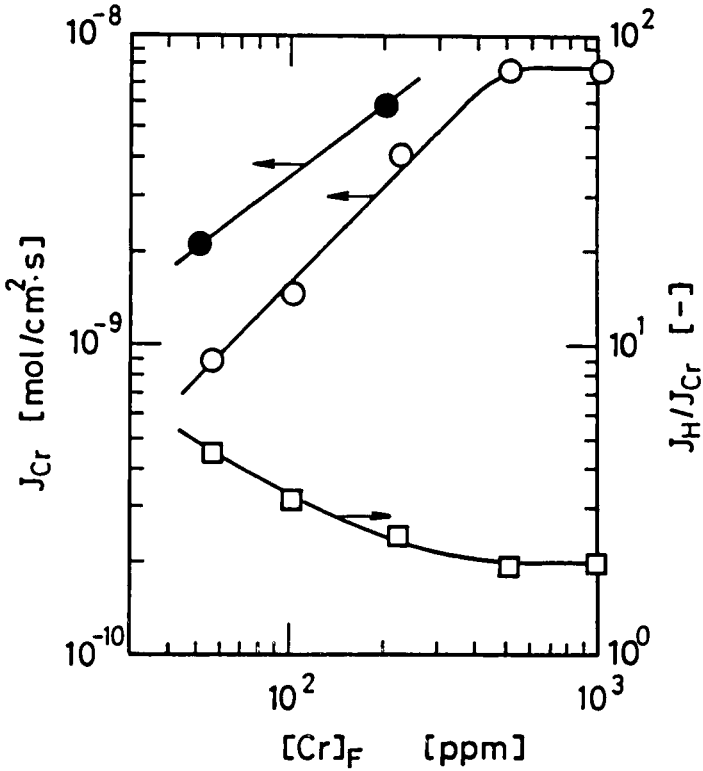

FIG. 5. Effect of Cr(VI) concentration. Permeation cell. $pH_F = 2.5$. Strip and membrane solutions are the same as shown in Fig. 4. Data indicated by ● were obtained by use of a 6-bladed turbine sitrrer for stirring the feed solution. Other data were obtained with a magnetic stirring bar.

Downloaded At: 12:54 25 January 2011

(2) Removal of Chromium and Zinc by Spiral-Type Flowing Liquid Membrane Module

The experimental results are summarized in Table 2. A steady state was reached after about 4 hours of operation.

The effect of the flow rate of the membrane solution v_M on $[Cr]_{Fout}/[Cr]_{Fin}$ is shown in Fig. 6. It is seen that about 99% of Cr(VI) is effectively

Downloaded At: 12:54 25 January 2011

TABLE 2
Recovery of Cr(VI) and Zn by Spiral-Type Flowing Liquid Membrane[a]

Metal	$[M]_{Fin}$ (ppm)	pH_{Fin}	v_F (cm^3/min)	v_M (cm^3/min)	$[M]_{Fout}$ (ppm)	pH_{Fout}	Recovery[b] (%)	$\Delta[H^+]_F/\Delta[M]_F$[c]
Cr	53.2	2.49	100	25	1.47	3.34	97.2	4.22
	50.1	2.51	55	25	0.80	3.54	98.4	4.53
	50.1	2.51	55	50	0.55	3.48	98.9	2.90
	55.1	2.49	55	80	0.64	3.68	98.8	2.89
	53.2	2.50	25	25	0.89	3.52	98.3	4.43
	55.5	2.49	150	25	2.22	2.93	96.0	2.51
	9.8	2.51	55	25	0.13	3.26	98.5	17.5
	110	2.46	55	25	1.27	3.54	98.9	2.71
	200	2.14	55	25	2.63	3.05	98.7	2.33
Zn	46.2	3.01	150	25	0.97	2.62	97.9	2.06
	46.2	3.01	100	25	0.56	2.62	98.8	2.04
	46.2	3.03	55	25	0.32	2.62	99.3	2.09
	46.2	3.03	25	25	0.09	2.61	99.8	2.16
	4660	2.99	95	25	4070	1.77	12.7	1.77
	4660	2.99	55	25	3780	1.66	18.9	1.97
	4600	3.02	20	25	3310	1.38	29.3	2.06

[a]For the recovery of Cr(VI), an organic solution consisting of 30 vol% TOA, 5 vol% 2-ethylhexyl alcohol, and 65 vol% Shellsol AB was used as the membrane solution, and the concentration of NaOH in the strip solution was kept at 0.1 mol/dm^3. For the recovery of zinc, the membrane solution was 1.40 mol/dm^3 di(2-ethylhexyl)phosphoric acid dissolved in *n*-dedecane, and the strip solution was 2 mol/dm^3 H_2SO_4. The volume of the membrane solution was 1 dm^3.

[b]Recovery (%) = $([M]_{Fin} - [M]_{Fout})/[M]_{Fin} \times 100$.

[c]$\Delta[H^+]_F = [H^+]_{Fin} - [H^+]_{Fout}$ for experiments of Cr(VI) recovery, and $\Delta[H^+]_F = [H^+]_{Fout} - [H^+]_{Fin}$ for experiments of Zn recovery. $\Delta[M] = [M]_{Fin} - [M]_{Fout}$. Proton concentration was calculated from pH.

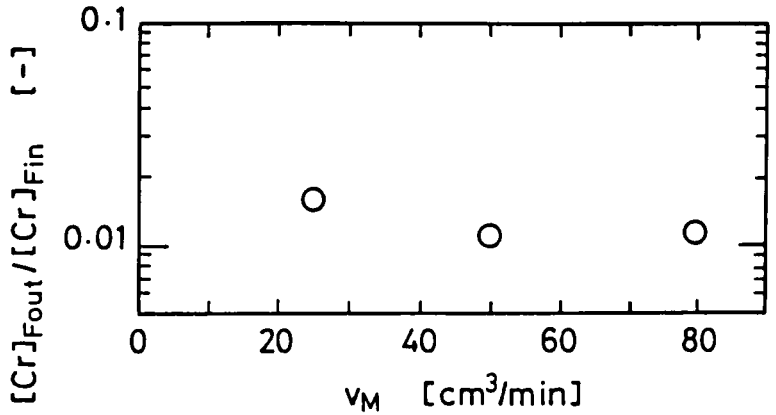

FIG. 6. Effect of the flow rate of the membrane solution on the recovery of Cr(VI). Spiral-type flowing liquid membrane module. $[Cr]_{Fin}$ = 50–56 ppm, pH_{Fin} = 2.5, v_F = 55 cm^3/min, $[NaOH]_S$ = 0.1 mol/dm^3. Membrane solution is the same as shown in Fig. 4.

Downloaded At: 12:54 25 January 2011

removed even in a once-through mode operation of the feed solution, and also that the degree of removal is not influenced by v_M because the feed phase diffusion is the rate-limiting step and because the diffusional resistance across the microporous membrane impregnated with the organic membrane solution is much larger than that across the flowing liquid membrane phase (*7*). Figure 7 shows the effect of chromium concentration on $[Cr]_{Fout}/[Cr]_{Fin}$ and the ratio of the permeation rate of proton to that of Cr(VI), $\Delta[H^+]_F/\Delta[Cr]$, where $\Delta[H^+]_F = [H^+]_{Fin} - [H^+]_{Fout}$ and $\Delta[Cr] = [Cr]_{Fin} - [Cr]_{Fout}$. In the range of $[Cr]_{Fin}$ studied, Cr(VI) is removed to almost the same extent. This result is reasonable if we consider that when the chromium concentration is low, diffusion through the boundary layer of the feed phase limits the permeation rate as shwon in Fig. 5. When $[Cr]_{Fin}$ is higher than 100 ppm, the flux ratio is about 2, indicating that the transport of sulfuric acid is small. However, when $[Cr]_{Fin}$ is low, the flux ratio is larger than 10. Therefore, it is important to adjust the pH of the feed solution at which J_{Cr} is high and Cr(VI) is selectively transported over sulfuric acid. When $[Cr]_{Fin}$ is 200 ppm, pH_F lower than 2.5 is required to prevent a large increase of pH_F along the channel of the module.

Figure 8 shows the time course of the concentration of Cr(VI) in the raffinate, $[Cr]_{Fout}$, and that in the stripping solution, $[Cr]_S$, in experiments of the uphill transport of Cr(VI) in which the stripping solution was

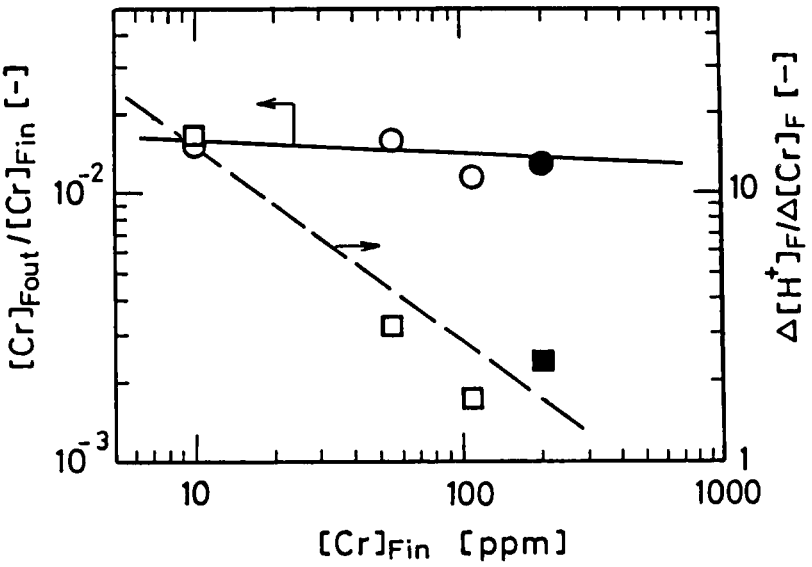

FIG. 7. Effect of Cr(VI) concentration. Spiral-type flowing liquid membrane module. $[NaOH]_S = 0.1$ mol/dm^3, $v_F = 55$ cm^3/min, $v_M = 25$ cm^3/min. Membrane solution is the same as shown in Fig. 4. Data indicated by ● and ■ were obtained at $pH_{Fin} = 2.14$. Other data were obtained at $pH_{Fin} = 2.5$.

Downloaded At: 12:54 25 January 2011

recycled through the module. It is clearly seen that even when $[Cr]_S$ is as high as 11 g/dm^3 and the concentration ratio $[Cr]_S/[Cr]_{Fout}$ is about 2800, 98% of Cr(VI) is successfully recovered and enriched. A much higher concentration ratio may be possible with this module.

The effect of the flow rate of the feed solution v_F when $[Cr]_{Fin}$ is low (about 50 ppm) is shown in Fig. 9. $[Cr]_{Fout}$ increases slightly with increasing v_F. Figure 9 also shows the results of the recovery of zinc obtained with the same module using di(2-ethylhexyl) phosphoric acid (D2EHPA) dissolved in *n*-dodecane as the carrier. The feed solutions were prepared by dissolving zinc nitrate in deionized water. When $[Zn]_{Fin}$ is low, i.e., 50 ppm, the distribution ratio is very high and permeation is limited by diffusion in the feed phase, and the membrane resistance can be neglected (*8*), which results in a high degree of removal. It can be seen that the degree of removal of Cr(VI) is approximately equal to that of zinc although the former is a little lower. In this case the following equation holds (*8*):

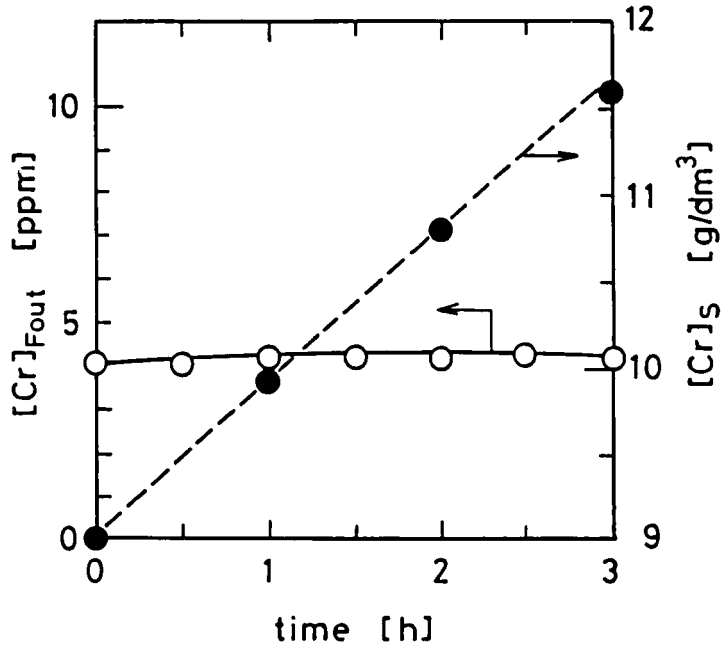

FIG. 8. Time courses of $[Cr]_{Fout}$ and $[Cr]_S$ in the uphill transport of Cr(VI). Spiral-type flowing liquid membrane module. Strip solution was recycled. Volume of the strip solution was 1 dm^3. $[Cr]_{Fin}$ = 200 ppm, pH_{Fin} = 2.15, $[NaOH]_S$ = 0.1 mol/dm^3, v_F = 100 cm^3/min, v_M = 25 cm^3/min. Membrane solution is the same as shown in Fig. 4.

Downloaded At: 12:54 25 January 2011

$$[M]_{Fout}/[M]_{Fin} = \exp(-k_{FM}S/v_F) \quad (5)$$

where S is the effective membrane area. The value of S was calculated as about 4560 cm^2 by subtracting the area covered with the adhesive from the total area used for producing the module, i.e., 6960 cm^2 [=(17.4 cm × 200 cm × 4)/2]. The values of k_F were calculated from the data shown in Fig. 9 by the use of Eq. (5) and are plotted against v_F in Fig. 10. It is seen that k_F is proportional to $v_F^{0.75}$ and also that the value of k_{FCr} is a little lower than that of k_{FZn}, probably because there may be a small contribution of the membrane resistance to the overall resistance in the permeation of Cr(VI).

When $[Zn]_{Fin}$ is high, i.e., 4660 ppm, the decrease in pH_F in the module is remarkable, as shown in Table 2. Under such conditions the

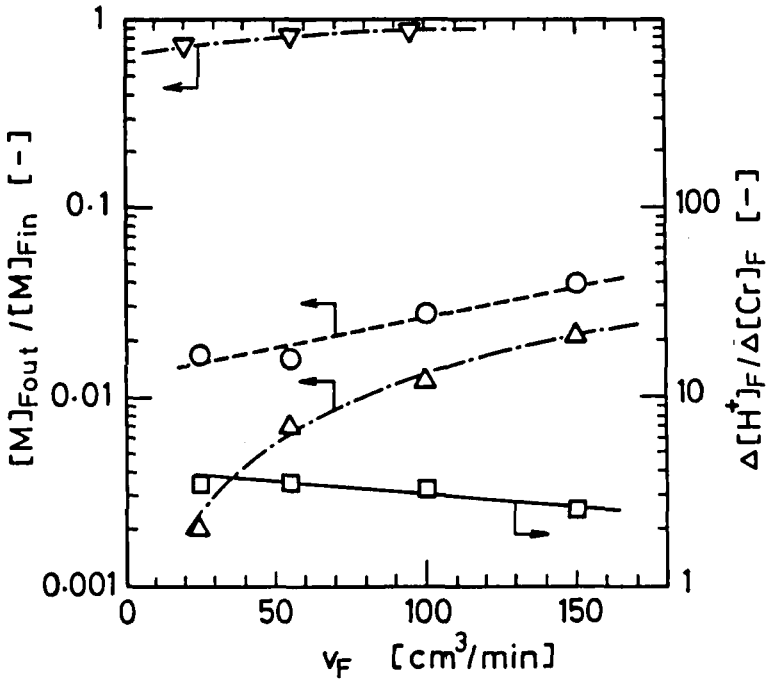

FIG. 9. Effect of the flow rate of feed solution on the recovery of Cr(VI) and Zn. Spiral-type flowing liquid membrane module. $v_M = 25$ cm^3/min. Membrane solutions are shown in Table 2. (○, □) $[Cr]_{Fin} = 50$–53 ppm, $pH_{Fin} = 2.50$, $[NaOH]_S = 0.1$ mol/dm^3. (△) $[Zn]_{Fin} = 46.2$ ppm, $pH_{Fin} = 3.01$, $[H_2SO_4]_S = 2$ mol/dm^3. (▽) $[Zn]_{Fin} = 4600$–4660 ppm, $pH_{Fin} = 3.00$, $[H_2SO_4]_S = 2$ mol/dm^3.

distribution ratio of zinc is low, and the permeation is limited by membrane diffusion, which results in a low degree of removal. As can be seen in Table 2, the flux ratio $\Delta[H^+]_F/\Delta[Zn]_F$ is approximately equal to 2, the theoretical value for the countertransport of a proton and a divalent cation.

A disadvantage of the flowing liquid membrane compared to the conventional supported liquid membrane is that solutes must permeate across two supported liquid membranes, which leads to low permeation rates. However, thinner support membranes can be used because of better stability of the flowing liquid membrane compared with the supported liquid membrane.

Downloaded At: 12:54 25 January 2011

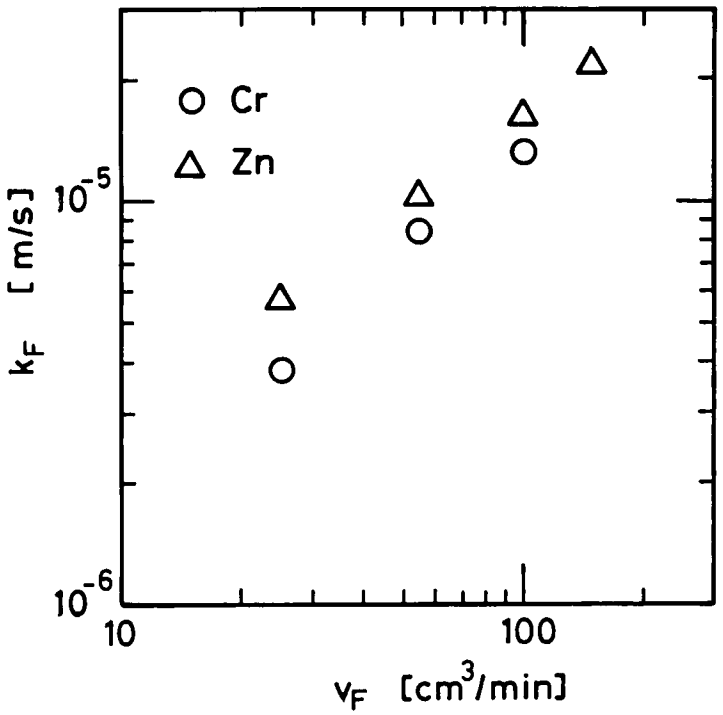

FIG. 10. Effect of the flow rate of feed solution on feed phase mass transfer coefficient.

Downloaded At: 12:54 25 January 2011

No appreciable membrane degradation was recognized during operation. However, after about 100 hours of operation, drops of an aqueous solution were found in the organic membrane solution in the reservior. This suggests that the feed or the strip solution leaked in the channel of the organic membrane phase. In view of the fact that adhesion of a highly hydrophobic membrane such as polytetrafluoroethylene is extremely difficult, the leakage may be due to a gradual decrease of the adhesion strength of the adhesive during contact with the organic membrane solution. It does not seem that the leakage is due to the transport or leakage of water across the microporous membranes. As described in the literature (*7*), we produced another spiral-type flowing liquid membrane module using microporous polypropylene membranes (Duragard 2502) instead of microporous polytetrafluoroethylene mem-

branes (Fluoropore FP-010). Experiments on the permeation of cobalt and nickel with this module using 2-ethylhexylphosphonic acid mono-2-ethylhexylester dissolved in *n*-dodecane as the carrier showed that this module was stable and no leakage was observed during the experiment for more than 100 hours. This may be due to better adhesion of polypropylene membranes than of polytetrafluoroethylene membranes. Therefore, adequate selection of support membranes and technical improvement in producing the modules may make the lifetime of the module long enough for the flowing liquid membrane to be used commercially.

CONCLUSION

A new type of liquid membrane called the "flowing liquid membrane" was proposed as a stable liquid membrane. This type of liquid membrane is made in a spiral-type module, and a series of experiments on the removal and enrichment of Cr(VI) was performed using tri-*n*-octylamine as the carrier to examine the stability and effect of operating variables on the degree of removal. It was found that about 99% of Cr(VI) was successfully removed from its dilute solutions, and a very high concentration factor could be obtained. It was also demonstrated that zinc is effectively removed from its dilute solutions by using di(2-ethylhexyl)phosphoric acid as the carrier.

The flowing liquid membrane module was stable during about 100 hours of operation. However, due to a decrease in adhesion strength during contact with the organic solution, leakage of the liquid occurred. Technical improvement in fabricating the module may prolong the lifetime of the module enough for the flowing liquid membrane to be used commercially.

SYMBOLS

J	flux (mol/m^{2}s)
k	mass transfer coefficient (m/s)
S	effective membrane area (m^2)
v	flow rate (m^3/s)

Downloaded At: 12:54 25 January 2011

Subscripts

F	feed solution (feed phase)
in	inlet of module
M	membrane solution (flowing membrane phase)
out	outlet of module
S	strip solution (strip phase)

Acknowledgments

This work was supported by a Grand-in Aid for Special Research Project on Environmental Science from the Ministry of Education, Culture and Science, Japan in 1986 (No. 61030049). We thank Sumitomo Electric Industries for supplying Fluoropore membranes.

Downloaded At: 12:54 25 January 2011

REFERENCES

1. R. D. Noble and J. D. Way, *Liquid Membrane, Theory and Application,* ASC Symposium Series 347, American Chemical Society, 1987.
2. P. R. Danesi, L. Reichley, and P. G. Rickert, *J. Memb. Sci., 31,* 117 (1987).
3. M. Teramoto and H. Tanimoto, *Sep. Sci. Technol., 18,* 871 (1983).
4. P. R. Danesi and P. G. Rickert, *Solvent Extr. Ion Exchange, 4,* 149 (1986).
5. M. Igawa, K. Saitou, F. Monoe, N. Nishida, M. Tanaka, and Y. Yamabe, *Nippon Kagaku Kaishi,* p. 826 (1985).
6. M. Teramoto, H. Matsuyama, H. Yamashiro, and S. Okamoto, *J. Membr. Sci., 45,* 115 (1989).
7. M. Teramoto, H. Matsuyama, H. Takaya, T. Yonehara, and Y. Miyake, *Proc. ISEC '88* Moscow, Vol. III, 1988, p. 110.
8. M. Teramoto, H. Matsuyama, H. Takaya, and S. Asano, *Sep. Sci. Technol., 22,* 2175 (1987).
9. H. Matsuyama, Y. Katayama, A. Kojima, I. Washijima, Y. Miyake, and M. Teramoto, *J. Chem. Eng. Jpn., 20,* 213 (1987).
10. J. Y.-P. Tong and E. L. King, *J. Am. Chem. Soc., 75,* 6180 (1953).
11. C. Boirie, *Bull. Soc. Chim. Fr.,* p. 1088 (1958).
12. O. Loiacono, E. Driori, and R. Molinari, *Chim. Ind. (Italy), 67,* 181 (1985).

Received by editor August 16, 1988
Revised December 21, 1988